SP410R

REVISIONS

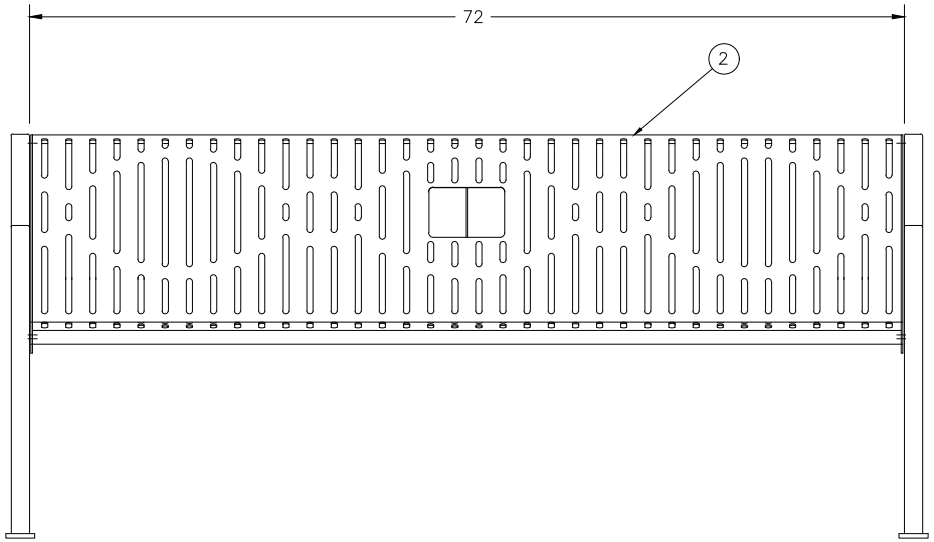

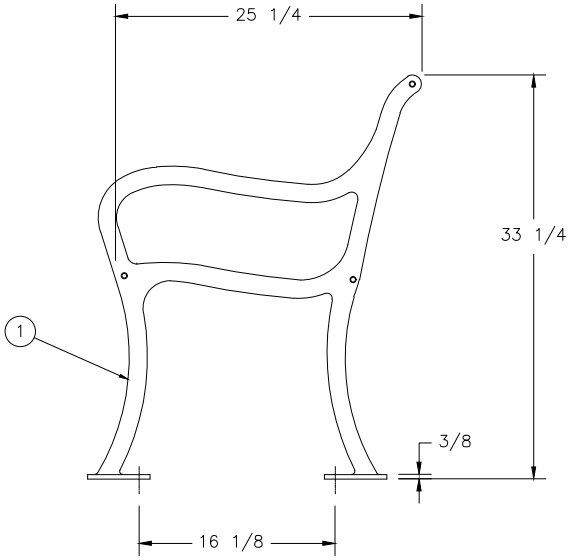

NOTES:

1. UNLESS OTHERWISE SPECIFIED, ALL DIMENSIONS ARE IN INCHES AND PER ASME Y14.5M–1994.
2. ALL DIMENSIONS ARE PRIOR TO PLASTISOL COATING.
3. DO NOT SCALE DRAWING.
4. FINISHED PART TO BE FREE OF ALL BURRS AND SHARP EDGES.
5. PART DRAWN AND DIMENSIONED IN THE FINAL FORMED SHAPE.

© Wabash Valley Manufacturing, Inc.

PROPRIETARY NOTICE

This document contains proprietary information owned by WABASH VALLEY MFG., INC. and may be used or reproduced only with the written consent from WABASH VALLEY MFG., INC. and is not to be used in any manner detrimental to the interests of WABASH VALLEY MFG., INC. and is protected under the the United States Copyright Laws.

DET	REQD	MATERIAL	CP NUMBER / DESCRIPTION
2	1	SEAT	8231
1	2	LEG	4007

TOLERANCE: ±1/16 ∠ ±1° PLASMA ±1/32

CHKD BY:

APVD BY:

DWN BY:

SCALE 1/8

TITLE 6' CRTYRD MEM BENCH, (COV LEG) – RIB

SHEET 1 OF 1

SIZE C

DR. NO. SP410R