OX1119C

REVISIONS

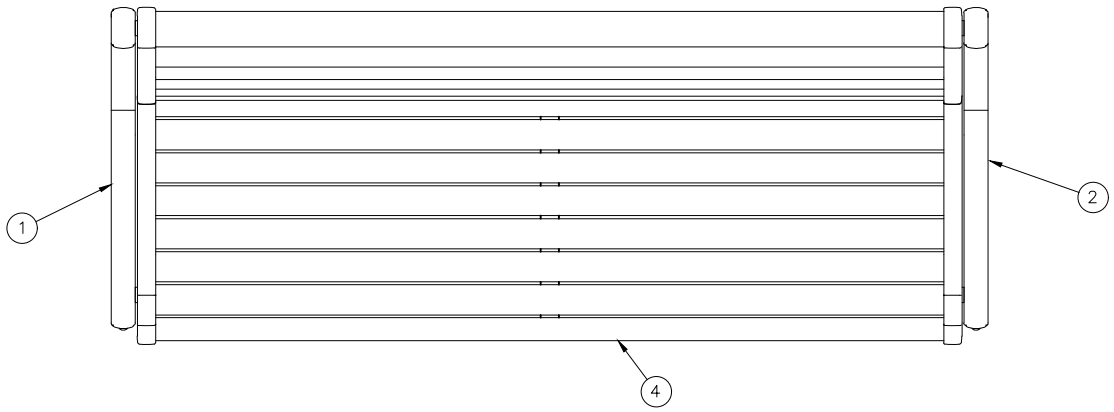

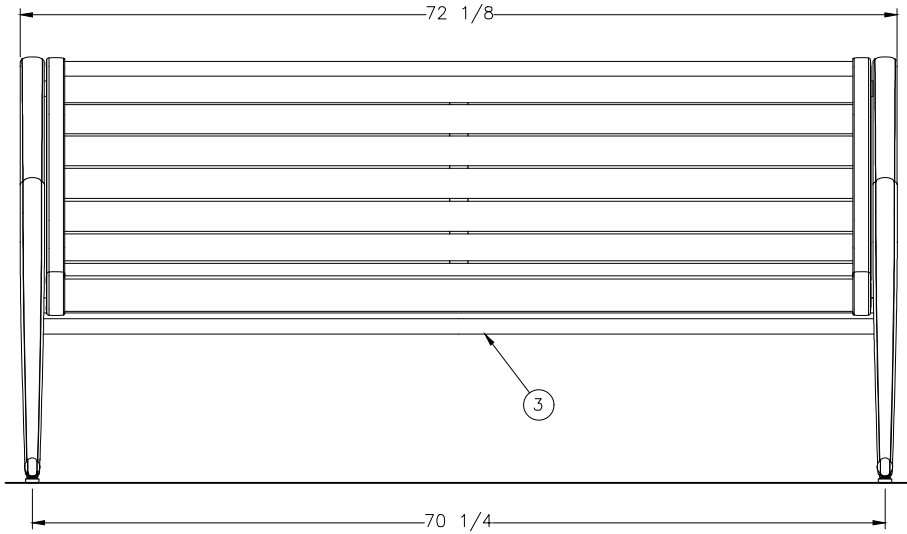

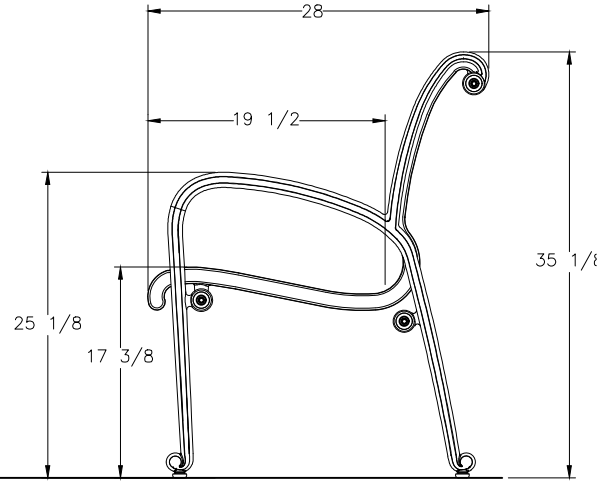

NOTES:

1. UNLESS OTHERWISE SPECIFIED, ALL DIMENSIONS ARE IN INCHES AND PER ASME Y14.5M–1994.
2. FINSIH: POWDER COATING.
3. DO NOT SCALE DRAWING.

© Wabash Valley Manufacturing, Inc.

PROPRIETARY NOTICE

This document contains proprietary information owned by WABASH VALLEY MFG., INC. and may be used or reproduced only with the written consent from WABASH VALLEY MFG., INC. and is not to be used in any manner detrimental to the interests of WABASH VALLEY MFG., INC. and is protected under the the United States Copyright Laws.

DET	REQD	MATERIAL	CP NUMBER / DESCRIPTION
4	1	BENCH	16085U
3	3	TUBE	4190
2	1	LEG	4184
1	1	LEG	4183

TOLERANCE: ±1/16 ∠ ±1° PLASMA ±1/32

CHKD BY:

APVD BY:

DWN BY:

SCALE 1/8

TITLE 6' BENCH W/BACK, W/ARMS, HORIZ-SLAT, PORT/S.M.

SHEET 1 OF 1

SIZE C

DR. NO. OX1119C